Alia / Corna / Collum

Rectangular

with butterfly extension

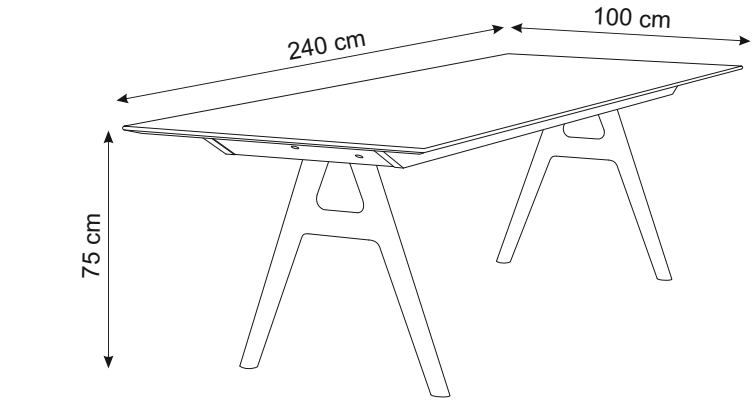

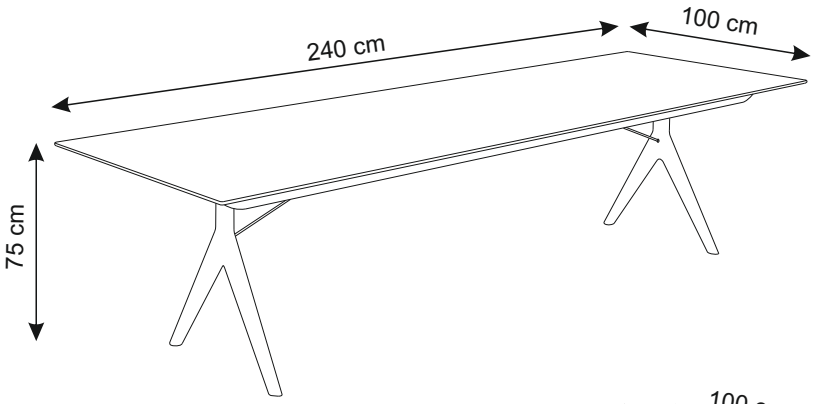

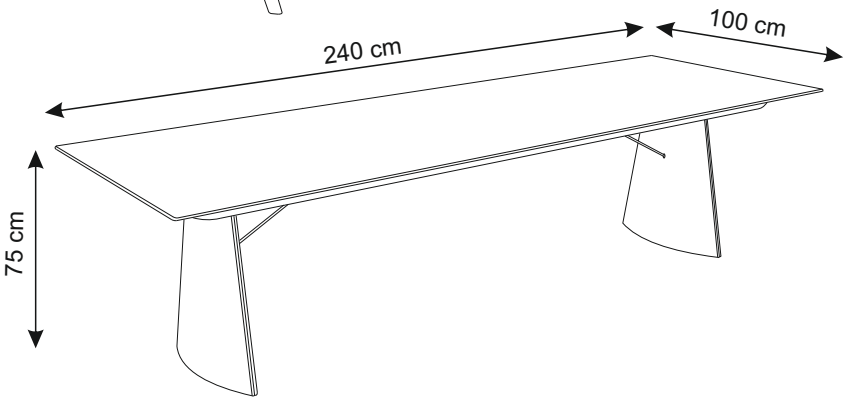

PBJ
DESIGNHOUSE
1968

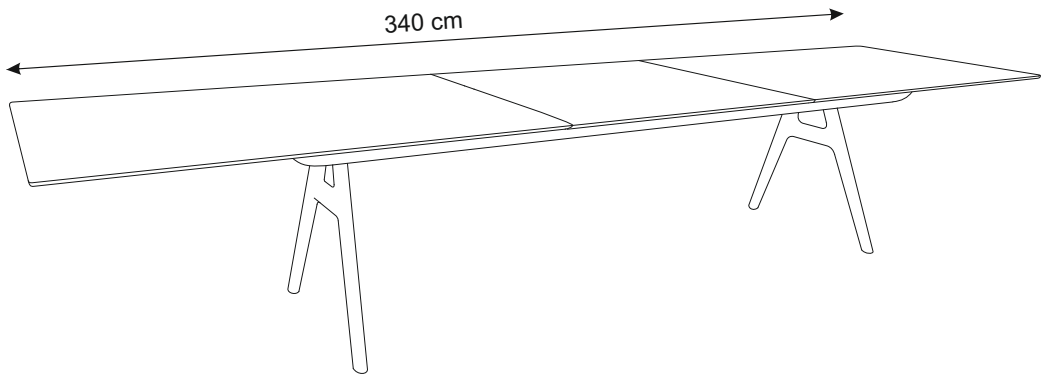
340 cm

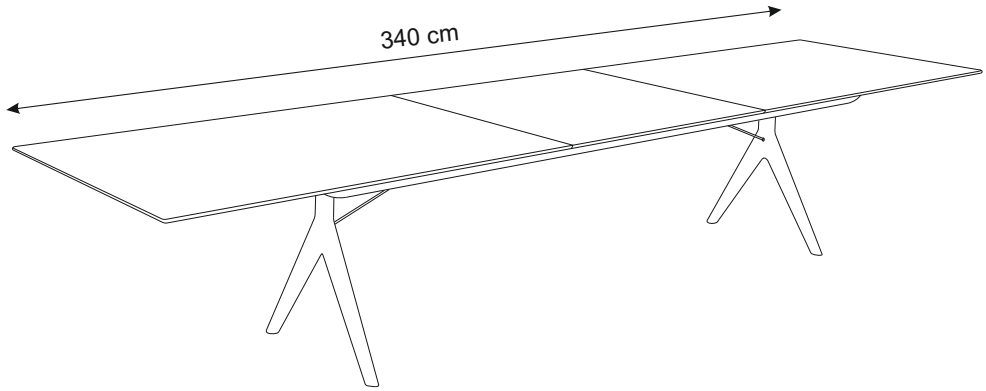
340 cm

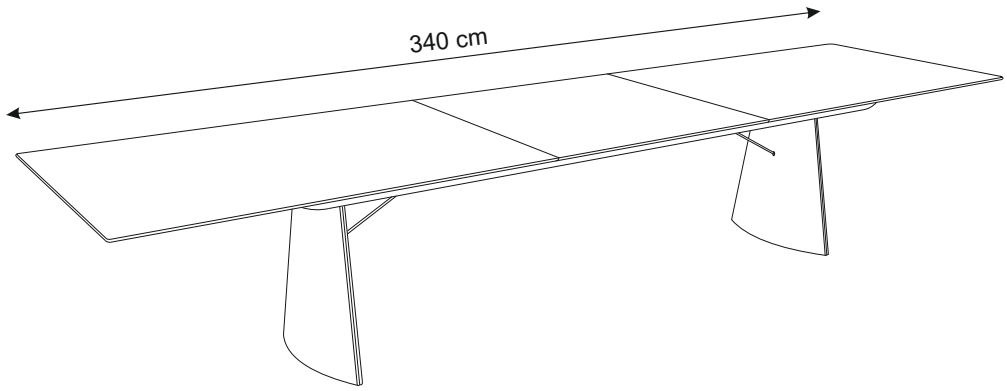
340 cm

A	B	C
6x40 mm	4 mm	6x8 mm
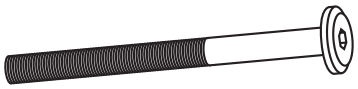	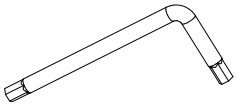	
16	1	2

D	E	F
5x14 mm	3 mm	
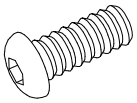	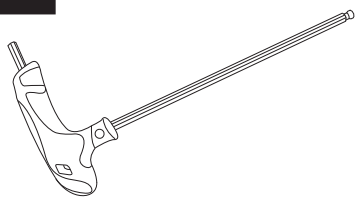	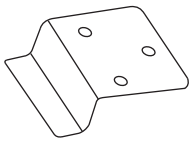
26	1	2

1

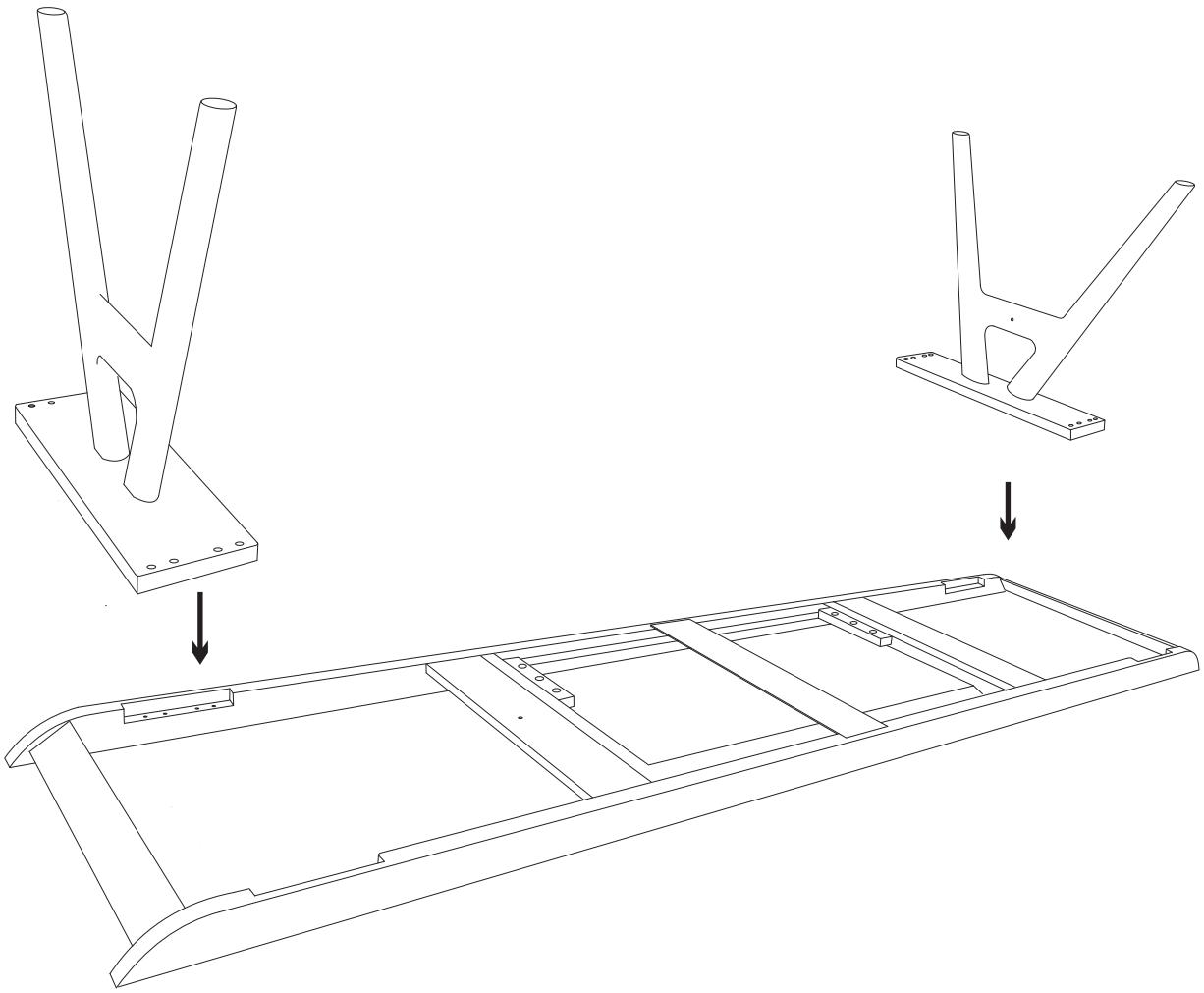

2

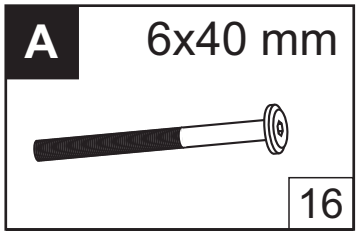

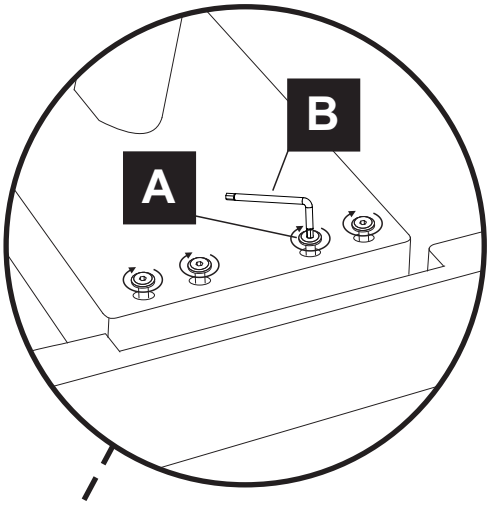

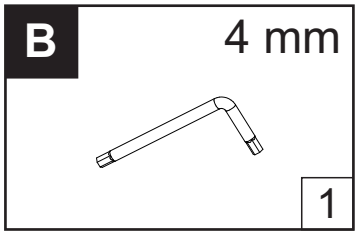

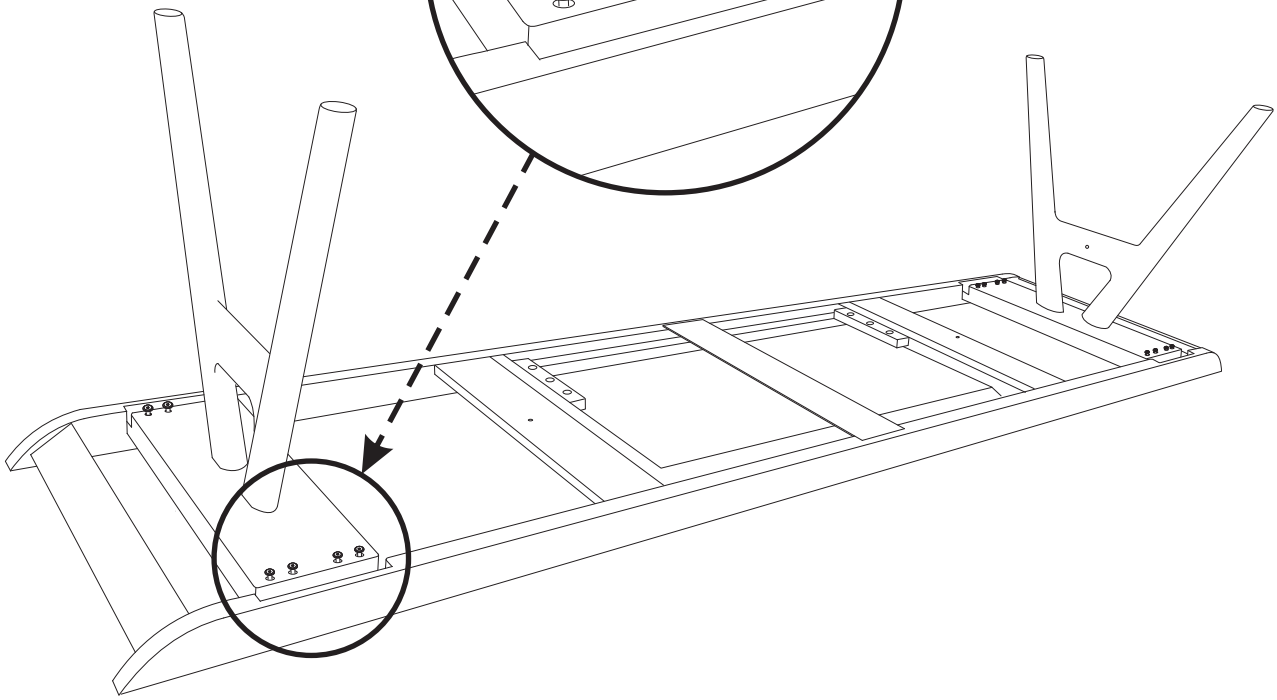

3

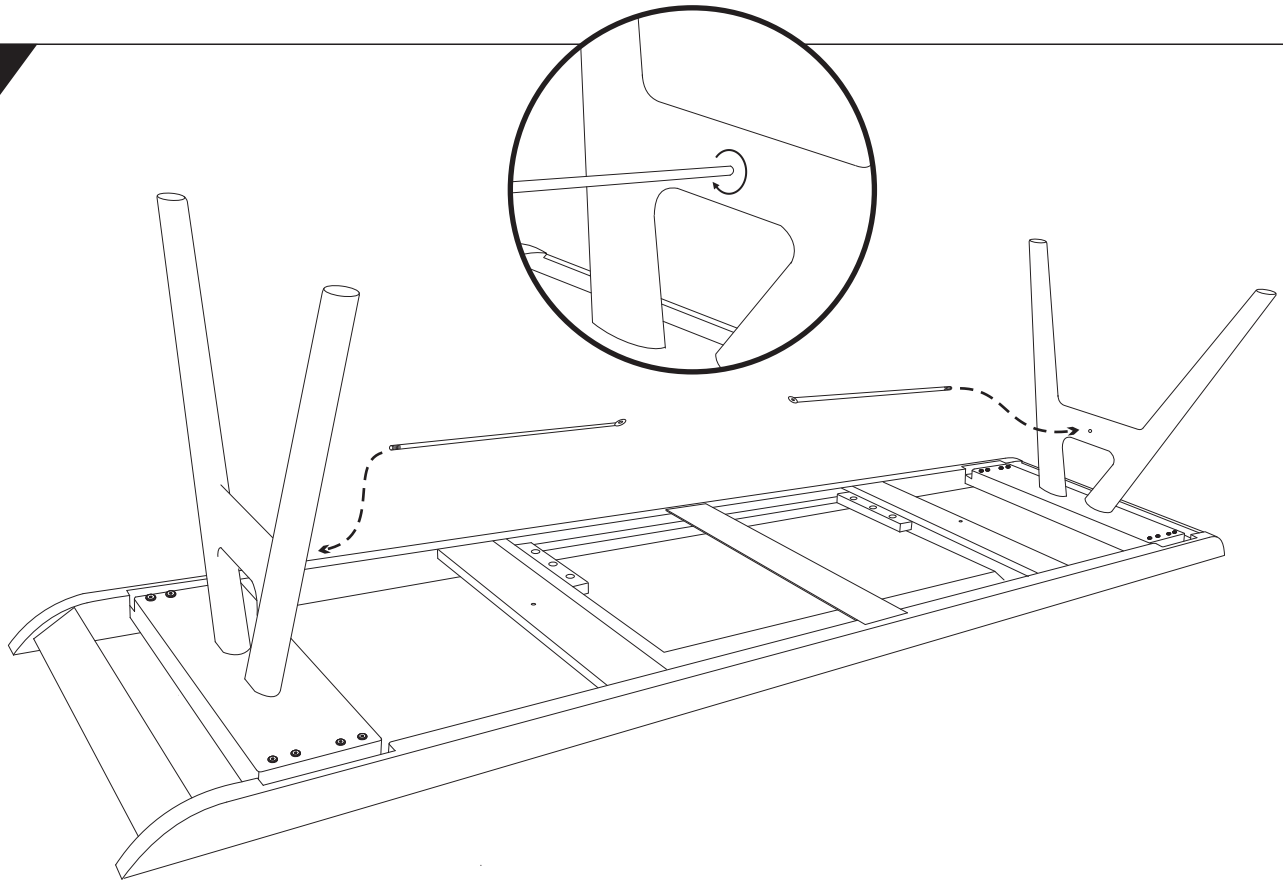

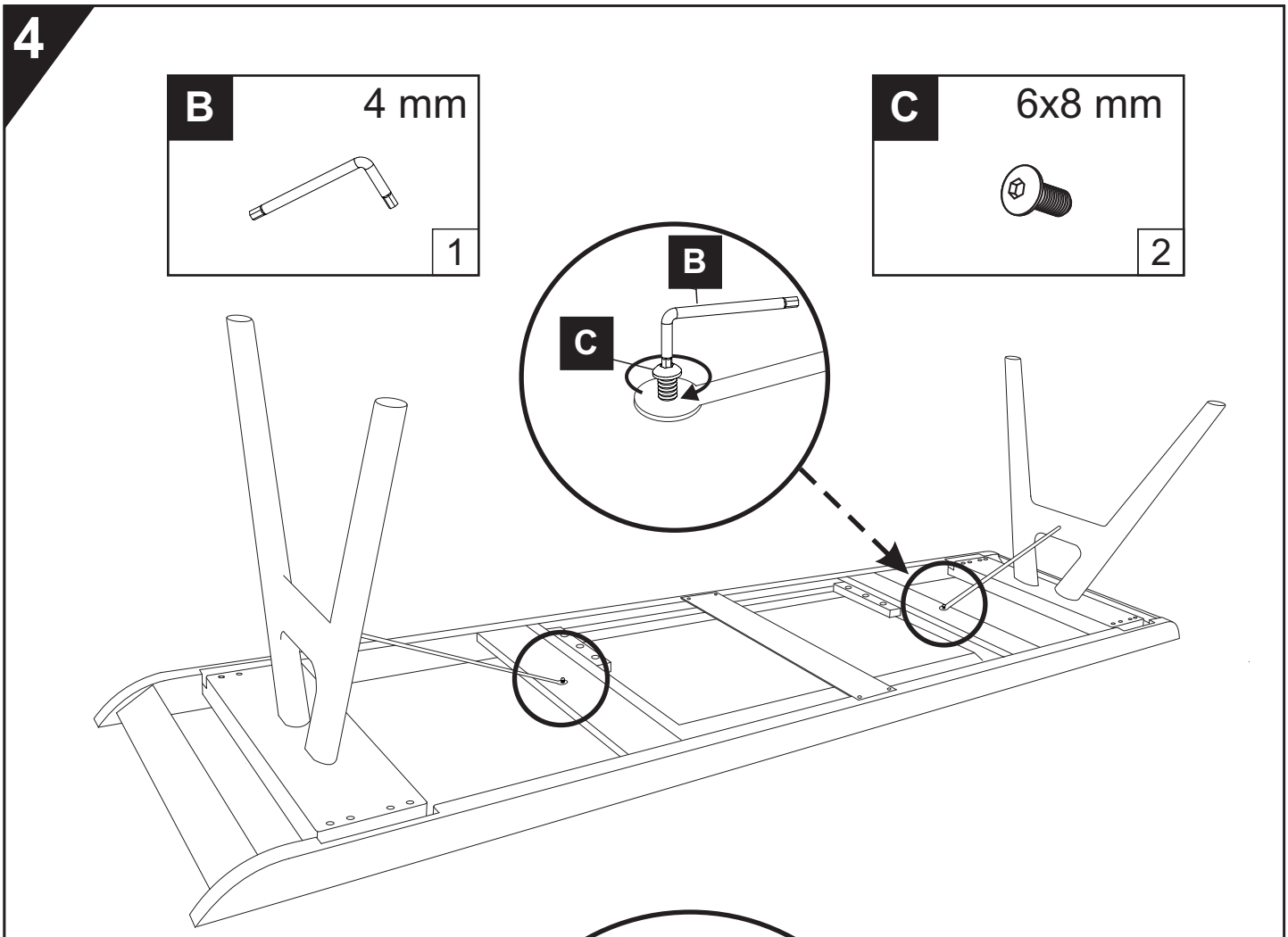
4
B
4 mm
1
C
6x8 mm
2
B
C

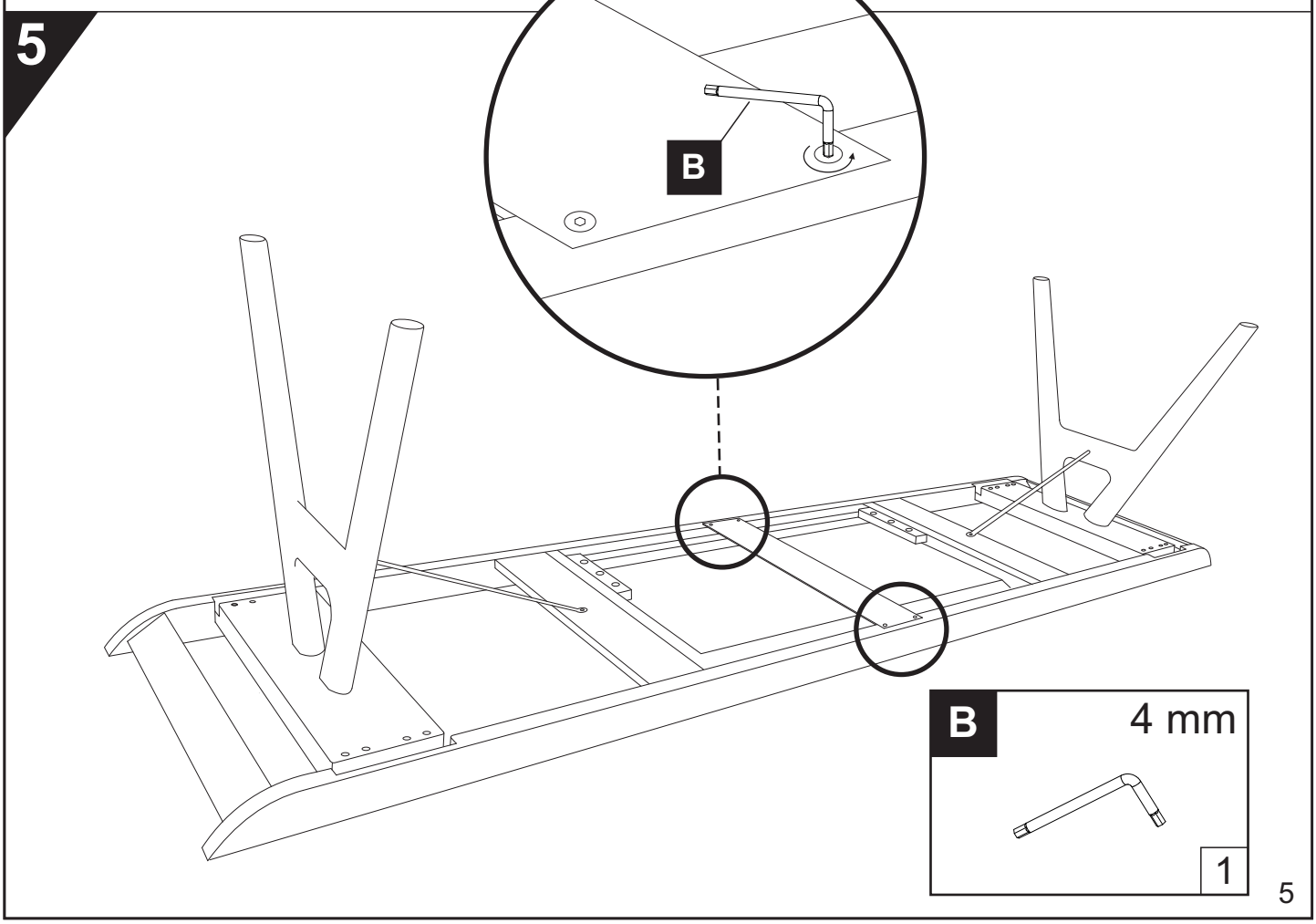
5
B
B
4 mm
1

6

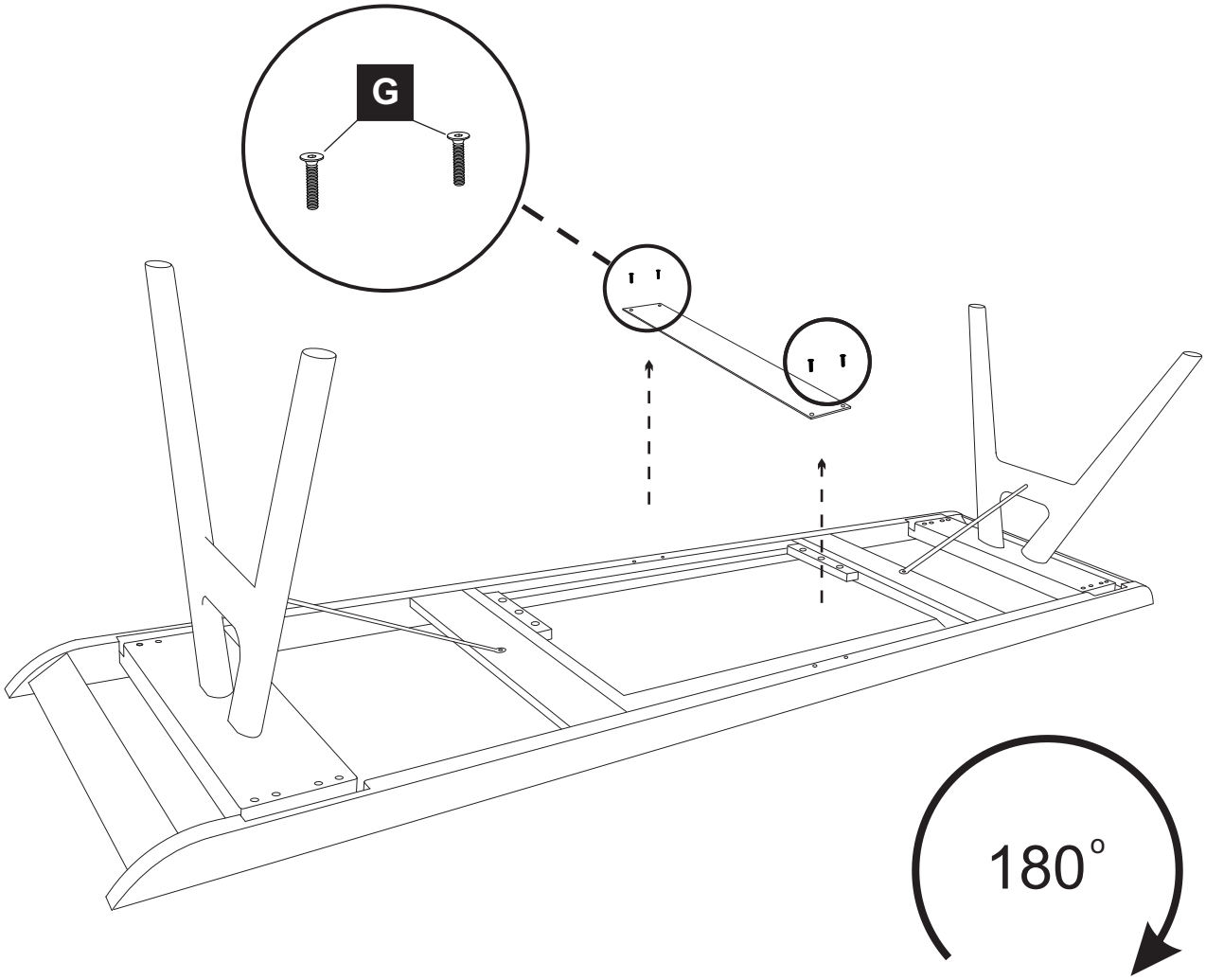

7

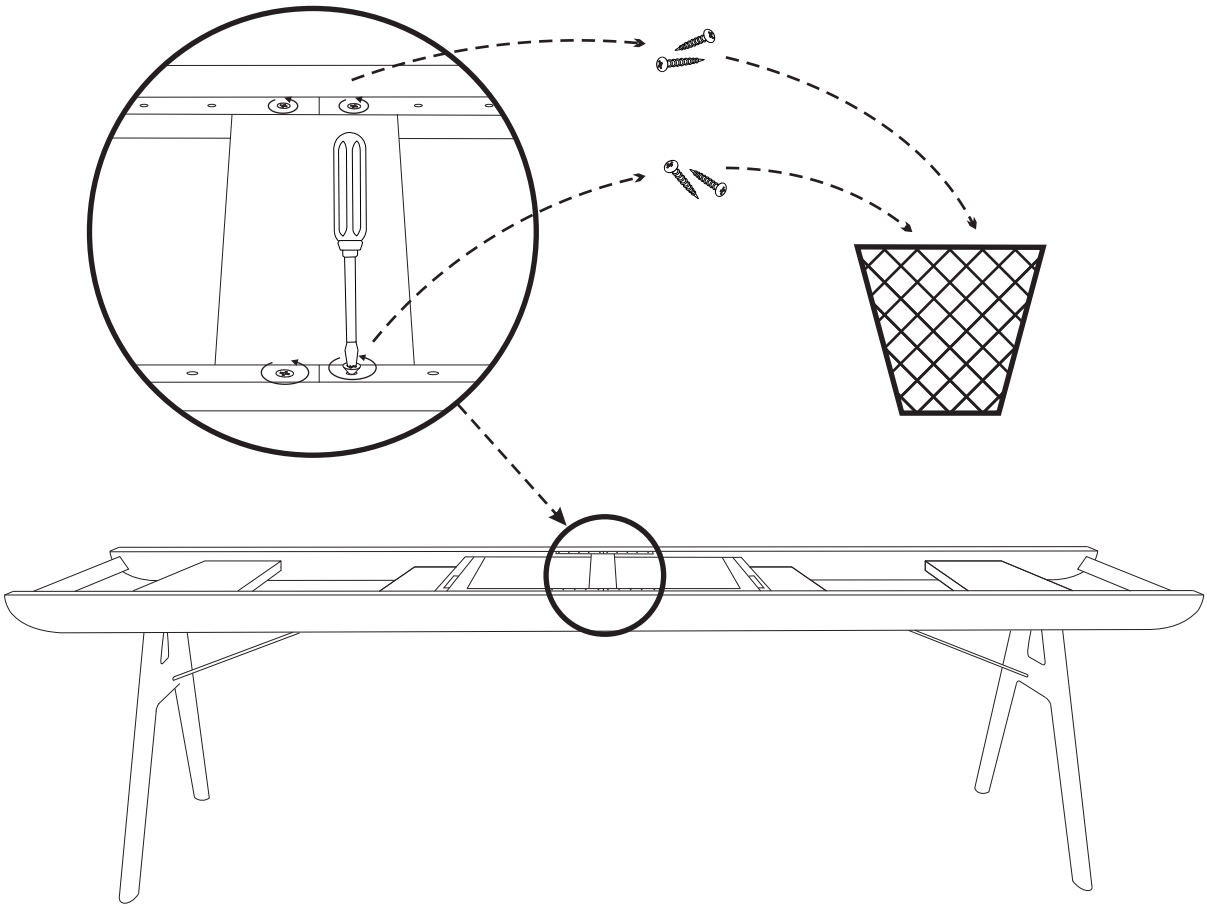

8

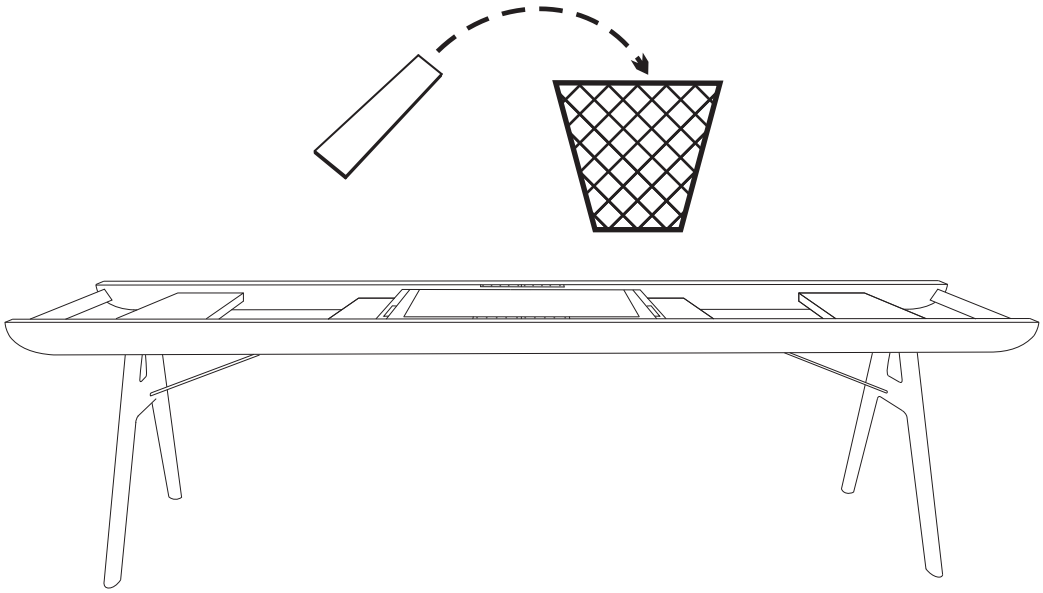

9

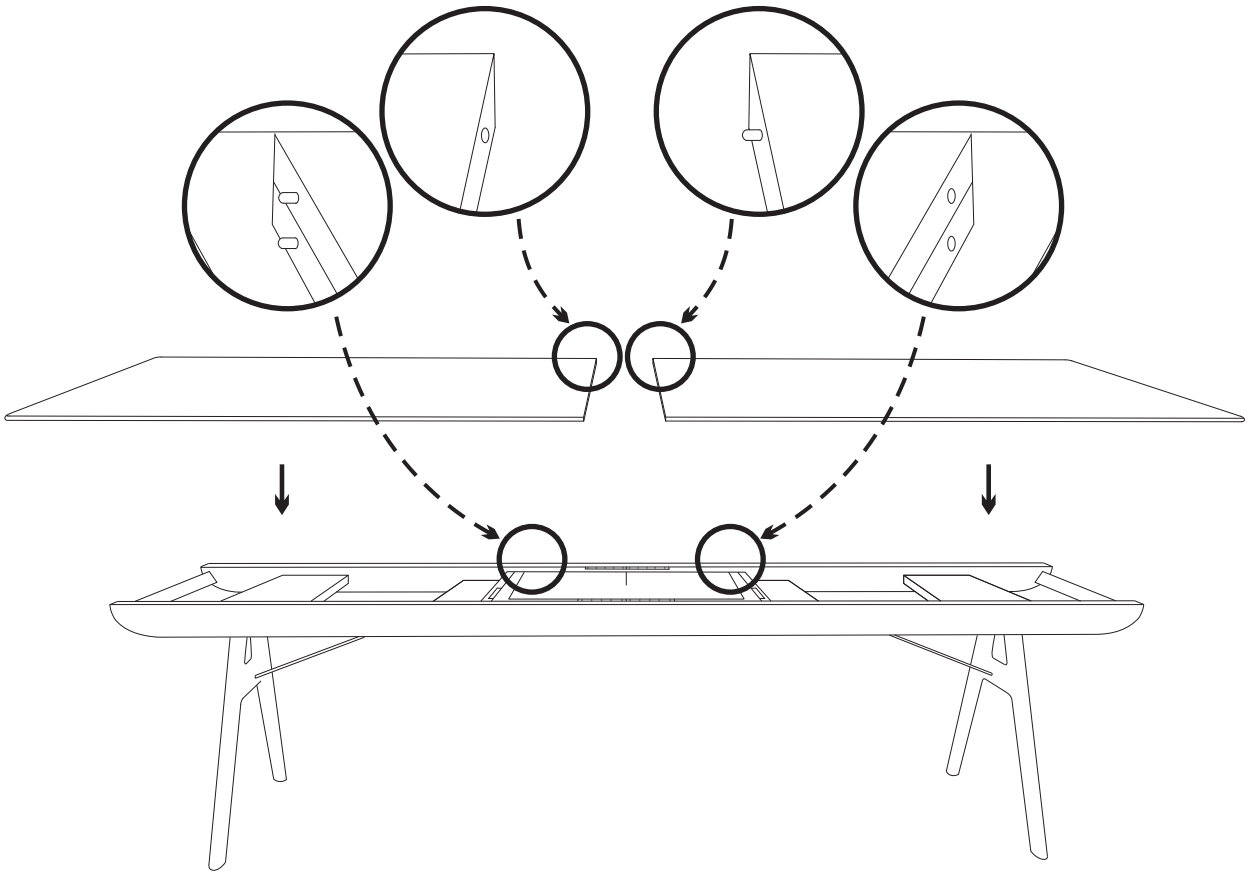

10

11

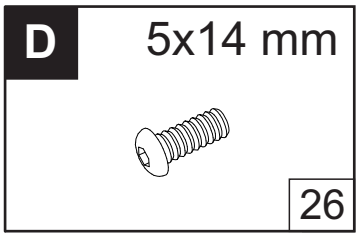

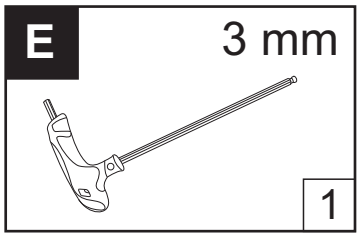

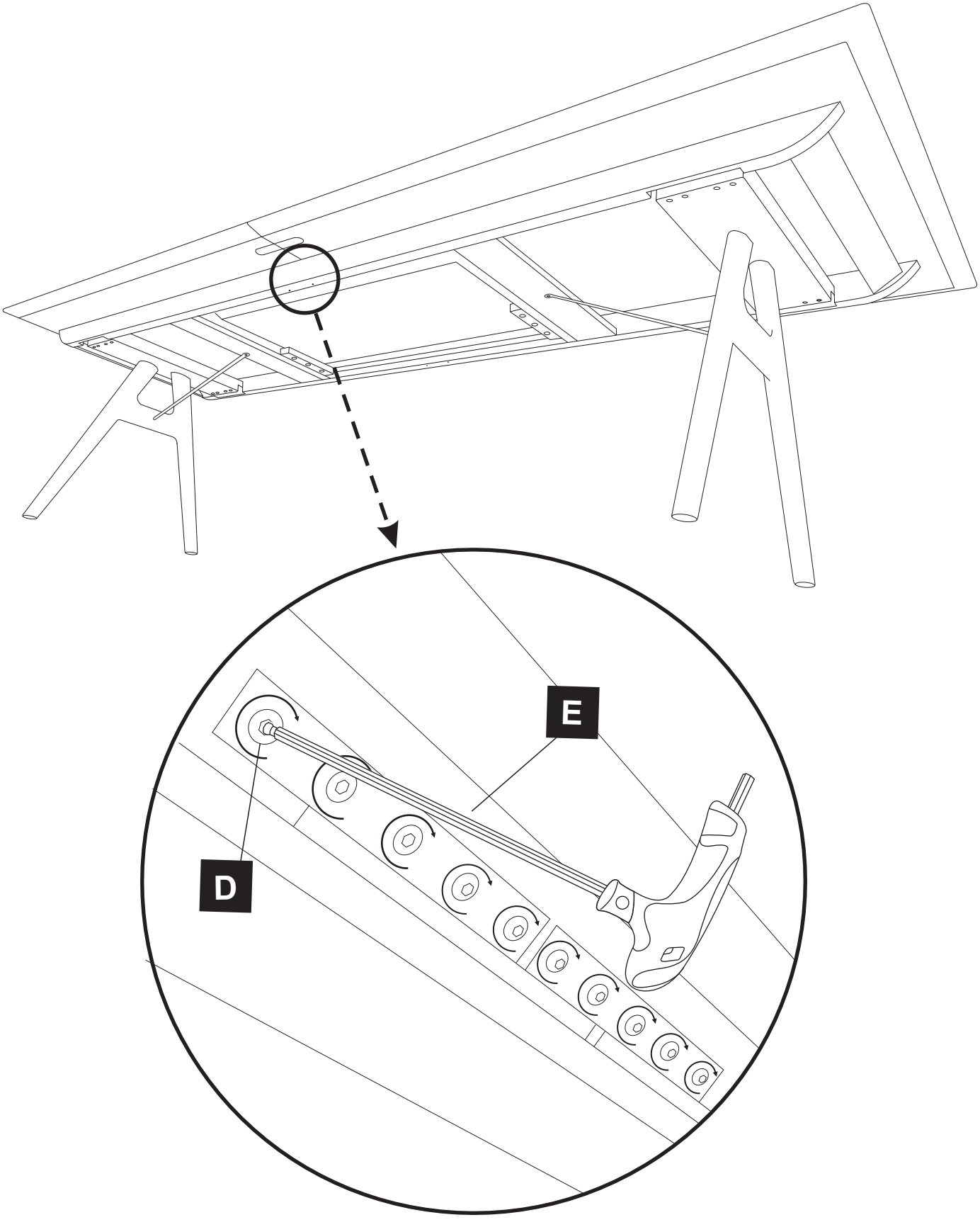

12

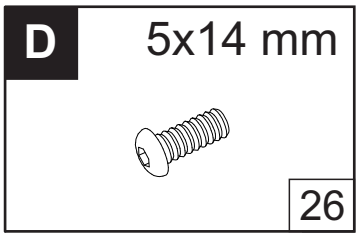

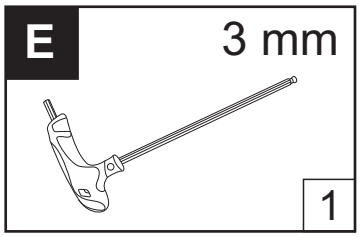

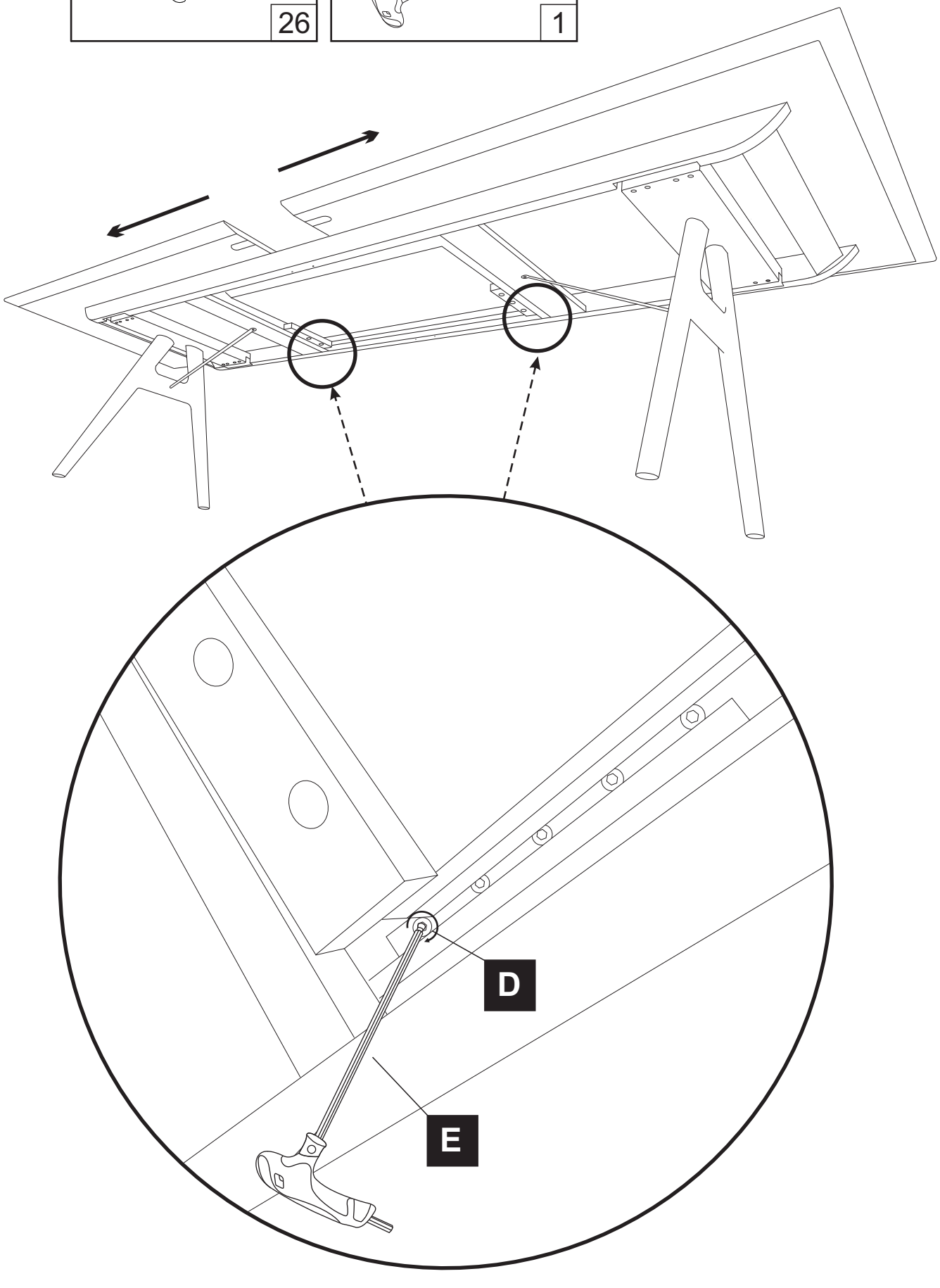

13

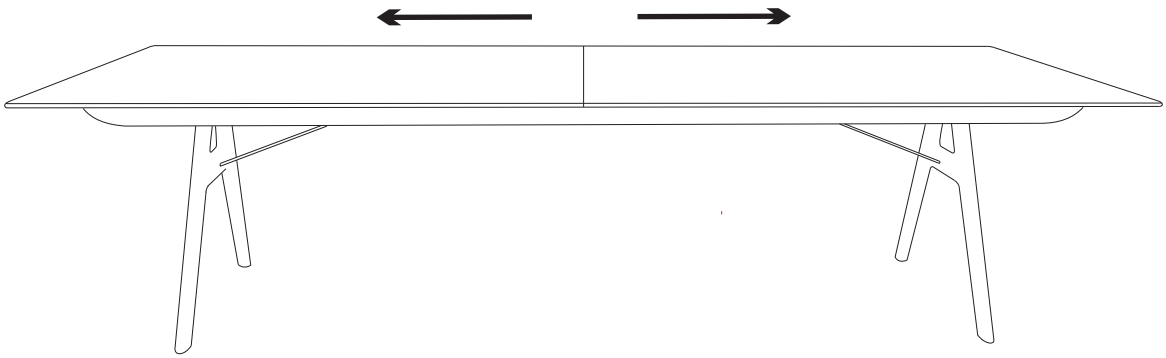

14

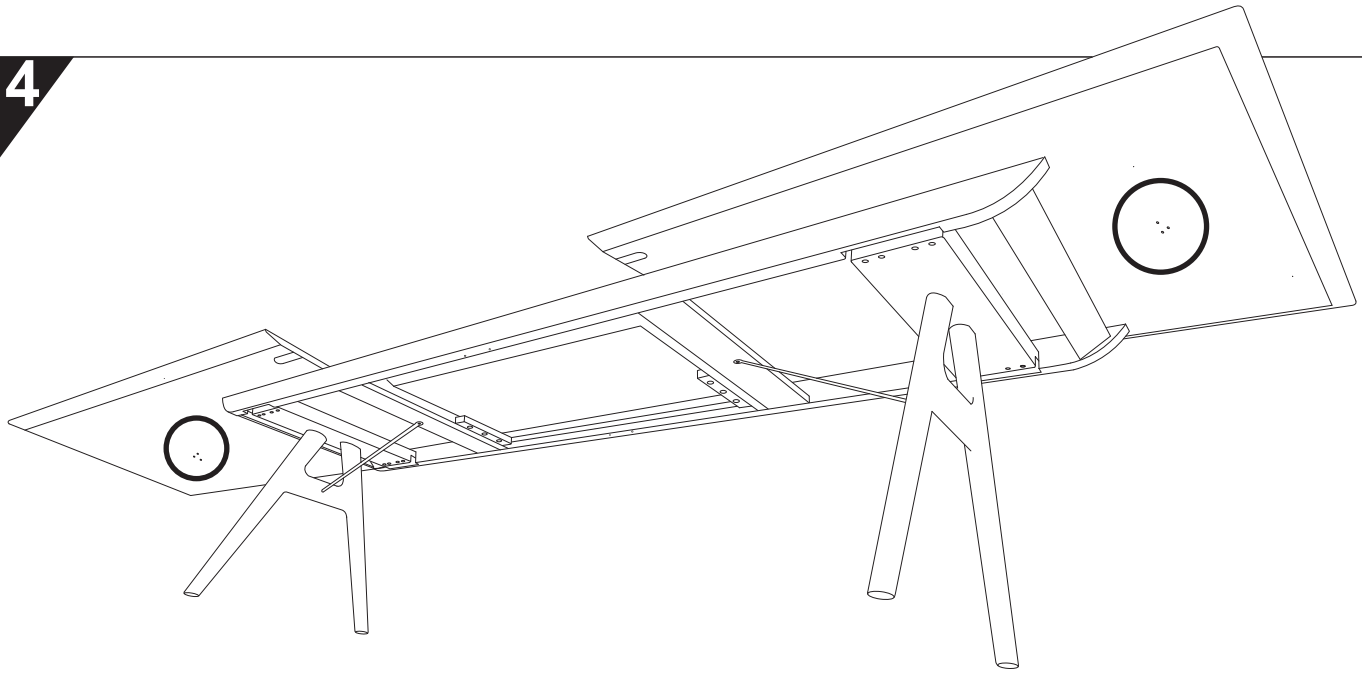

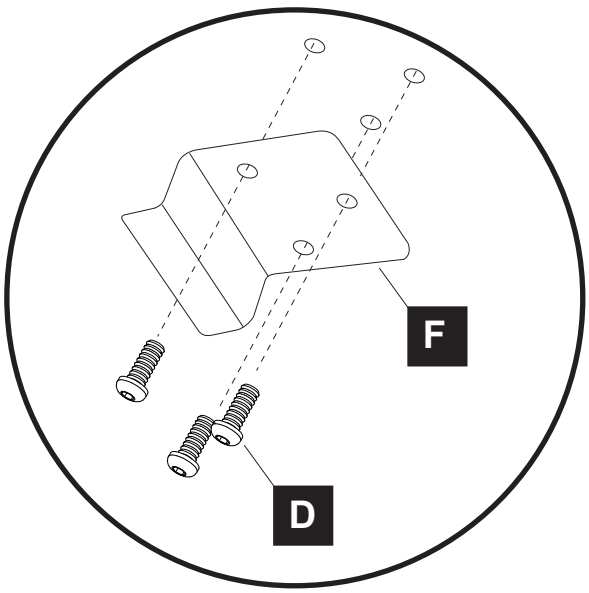

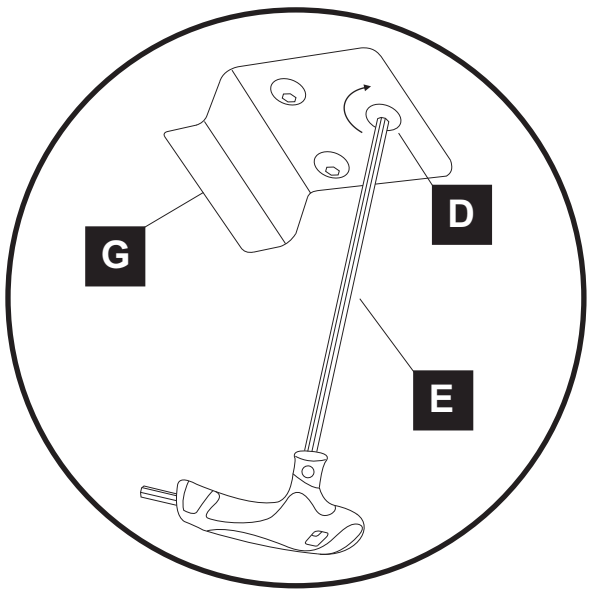

D 5x14 mm 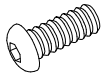	**E** 3 mm 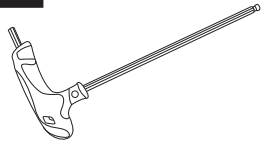	**F** 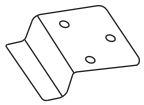
26	1	2

15

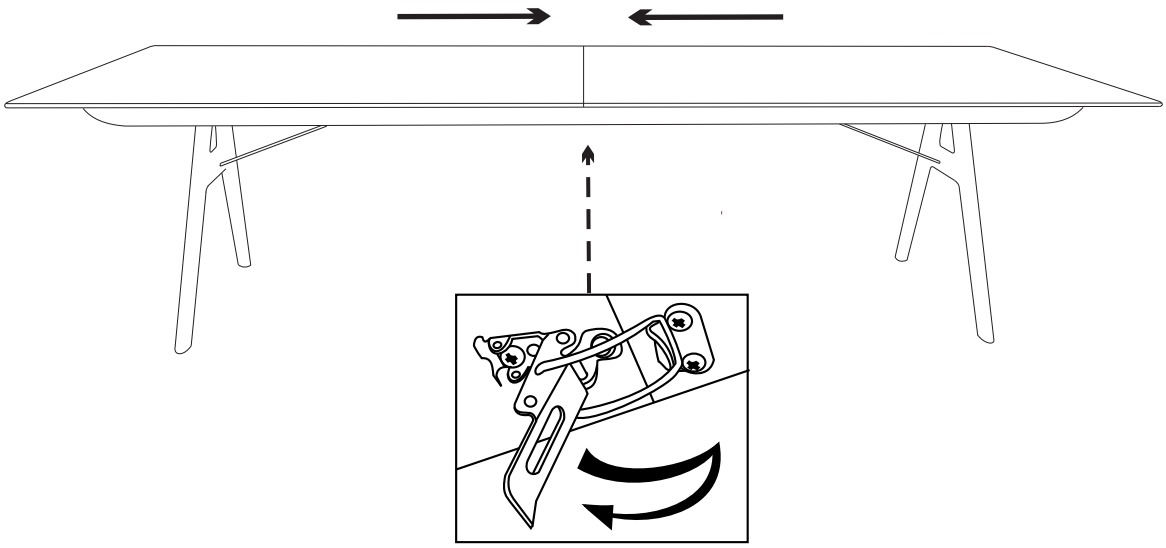

16

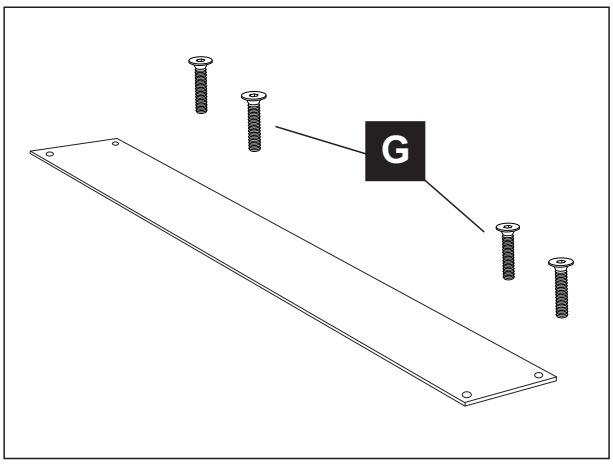

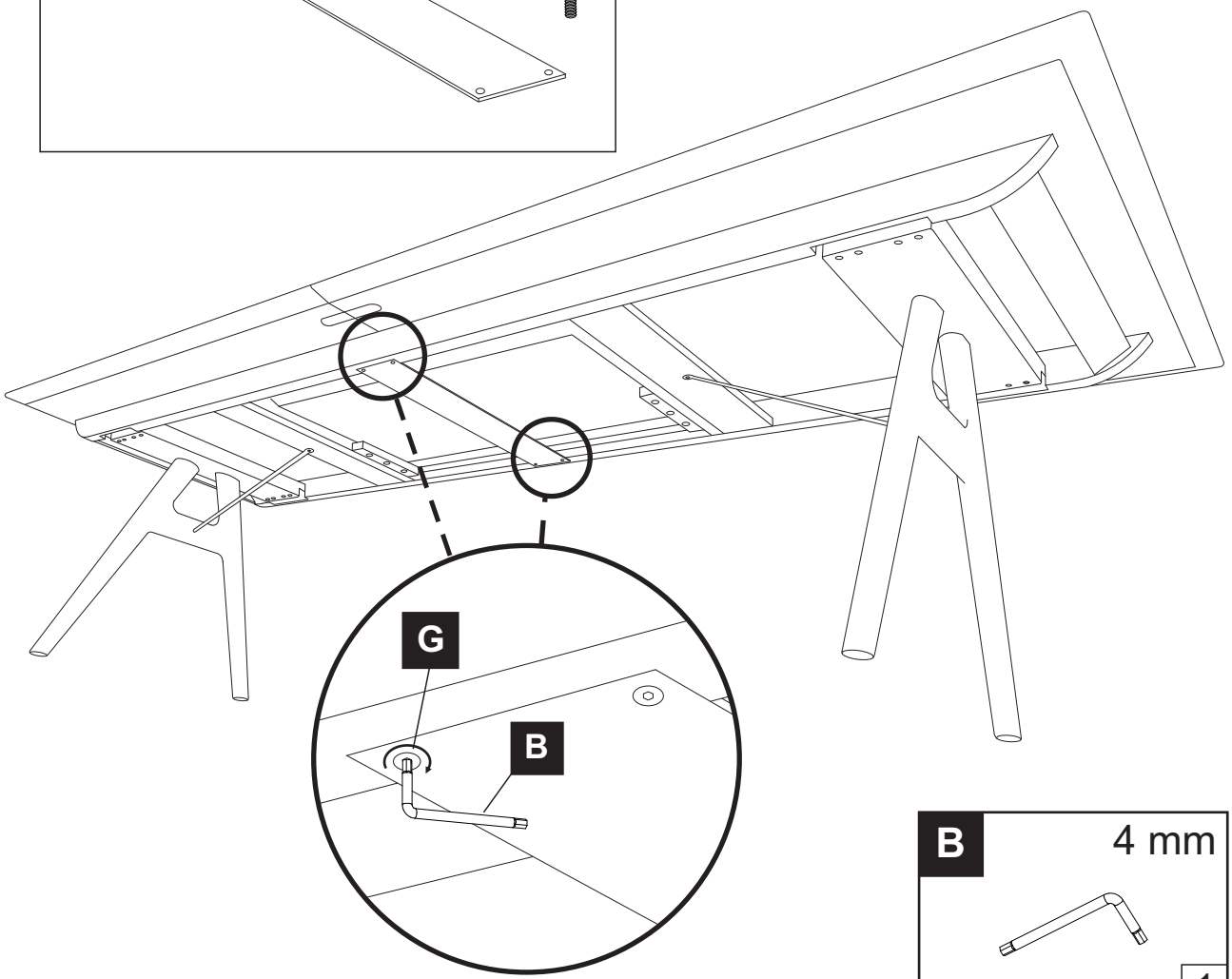

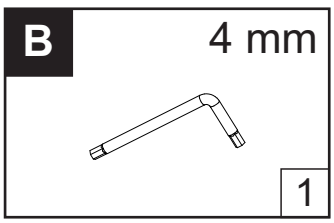

17

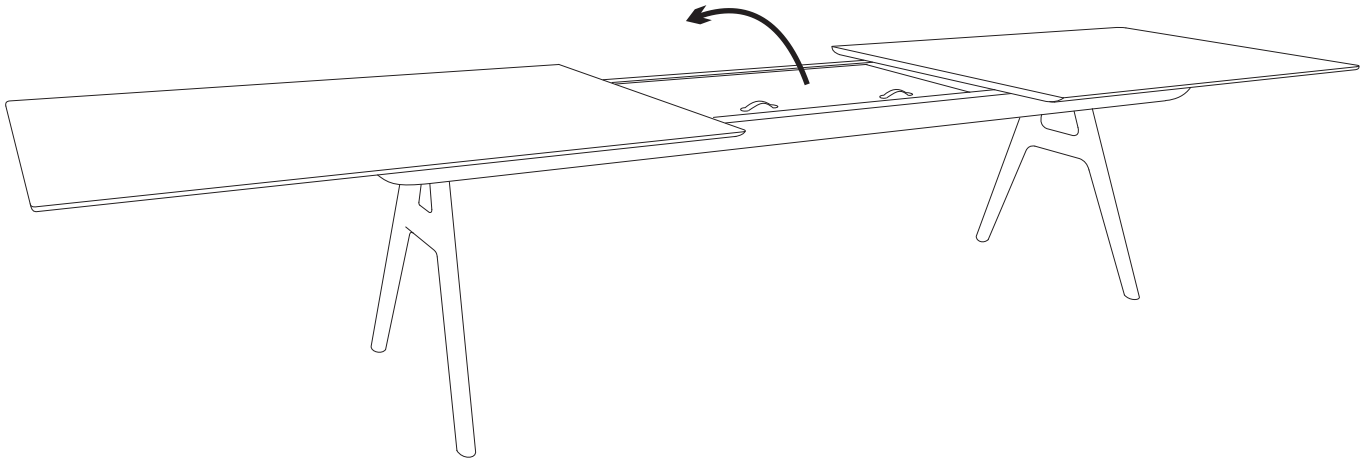

18

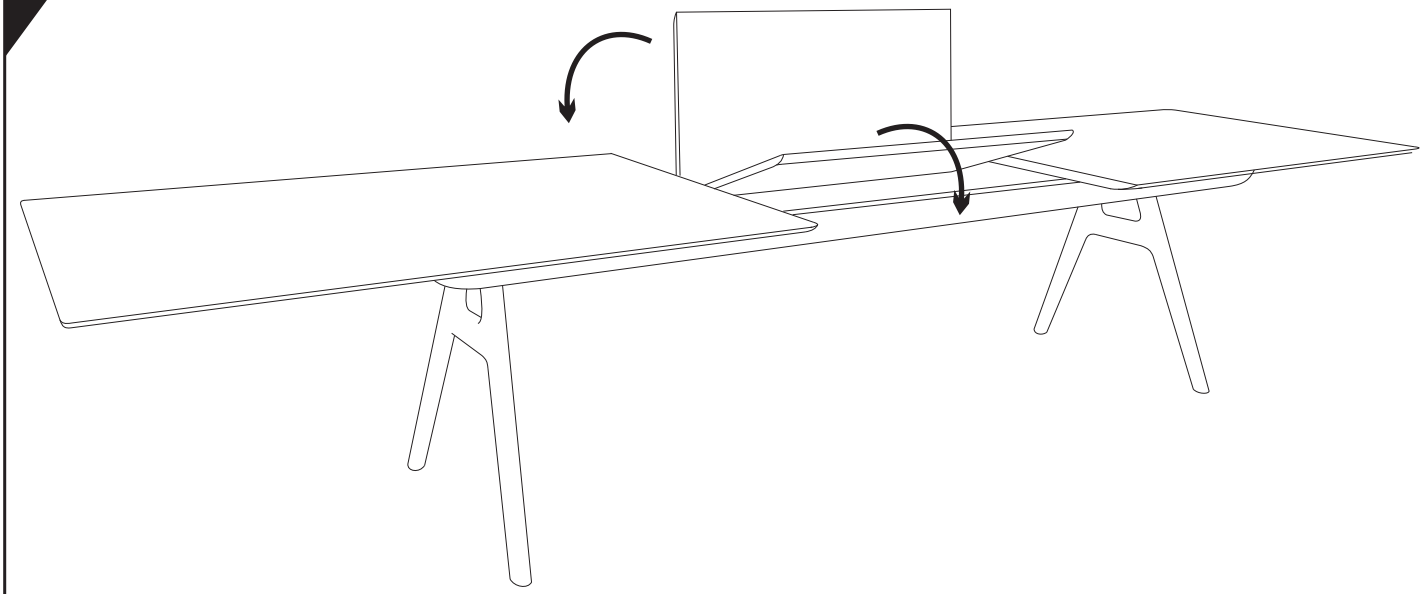

19

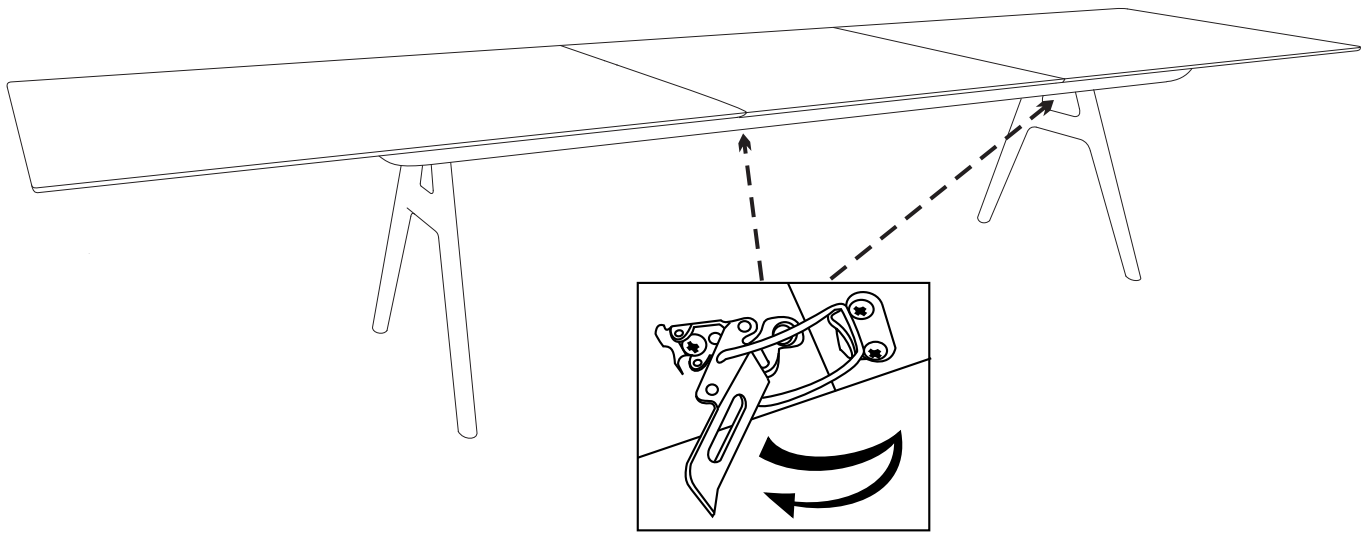

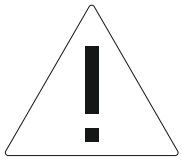	Please tighten the screws/legs after 4-5 weeks of use and then subsequently every 4-5 months.
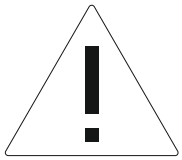	We do not recommend that young children are present during assembly due to the risk of choking on small parts and/or injury. Never leave your child unattended with furniture that has not been fully assembled.
	Requires 2 persons to lift.
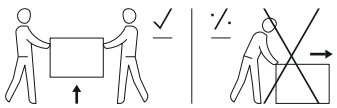	Do not push or drag boxes or furniture across the floor - please lift when moving.
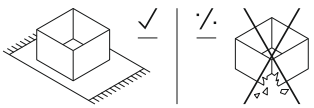	We recommend using a non-slip rug underlay.
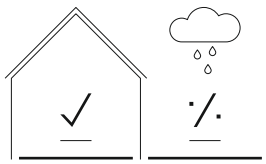	This product is for indoor use only.
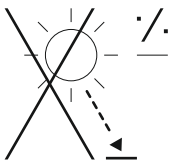	Do not place the furniture in direct sunlight.
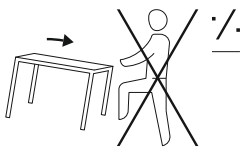	Do not use furniture as a climbing aid.
	Do not sit, stand or jumpon the table