Aeris / Navis

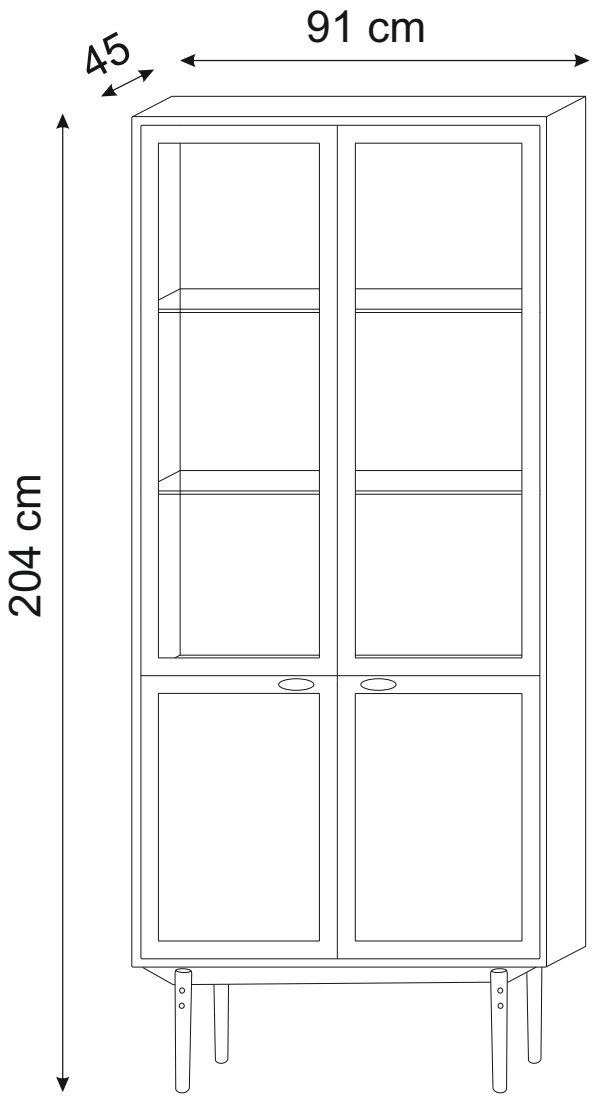

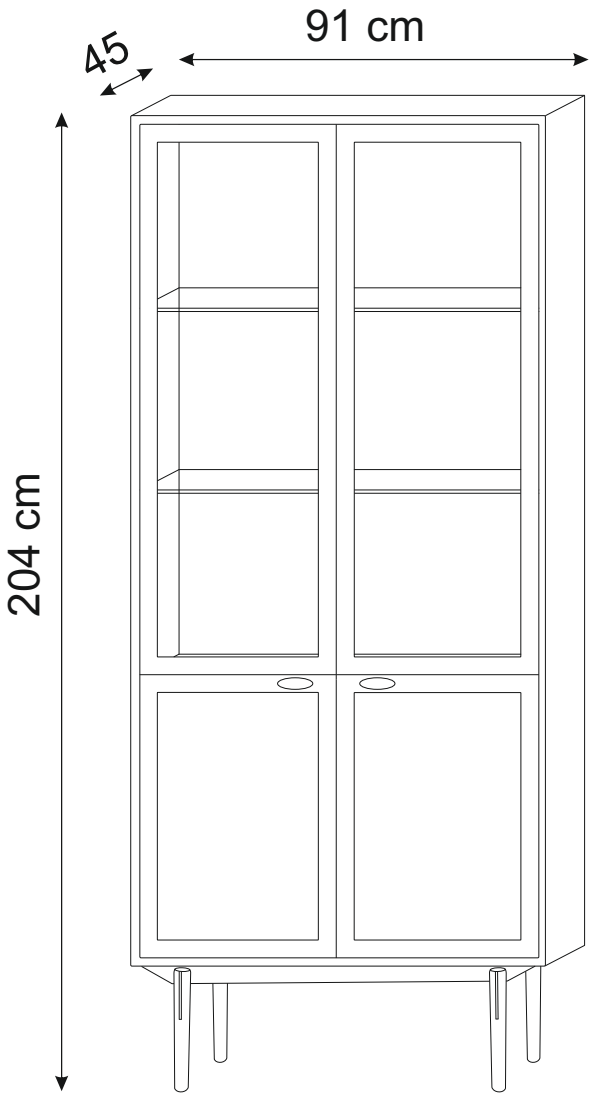

PBJ
DESIGNHOUSE
1968

A M6x60 mm

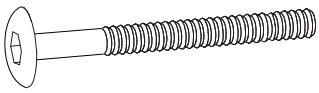

4

B 4x60mm

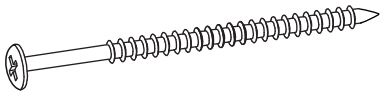

4

E

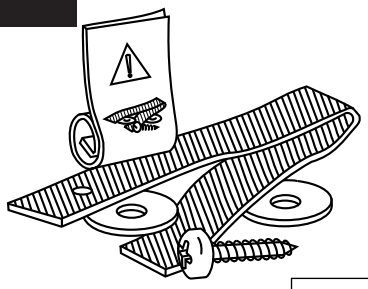

1

C M6x90 mm

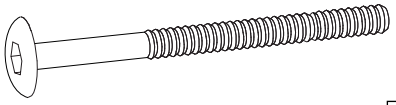

4

D 4 mm

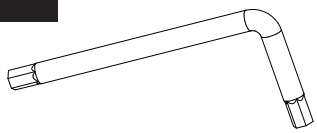

241182

1

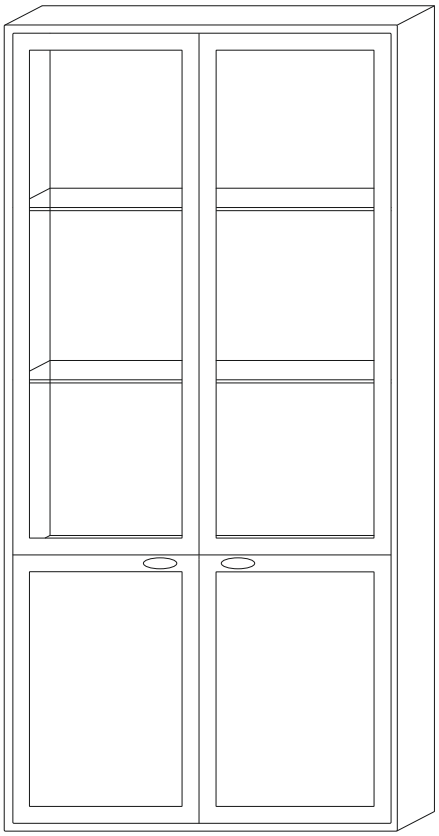

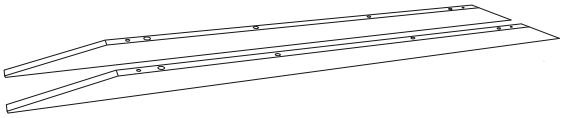

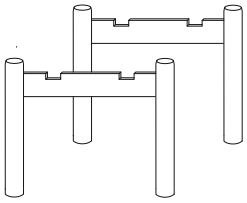

1

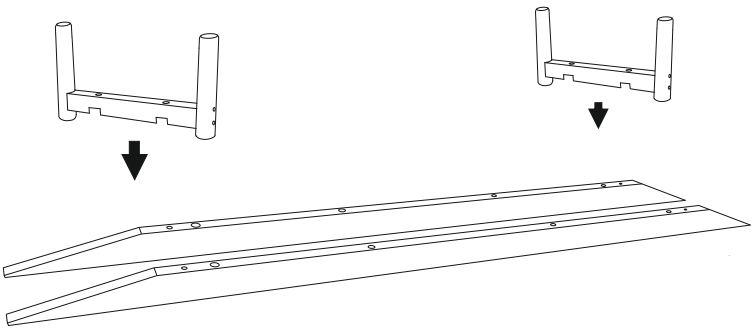

C M6x90 mm

4

D 4 mm

1

2

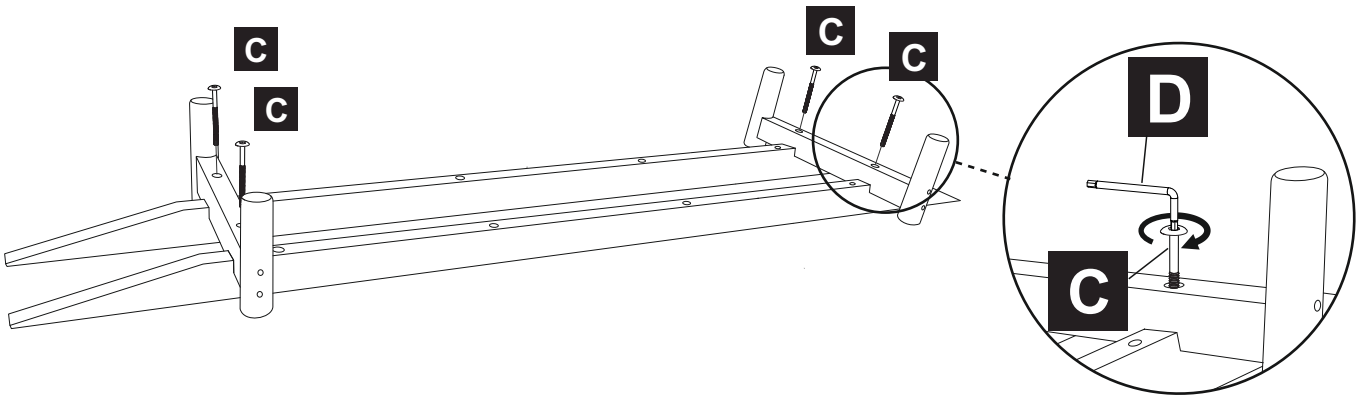

3

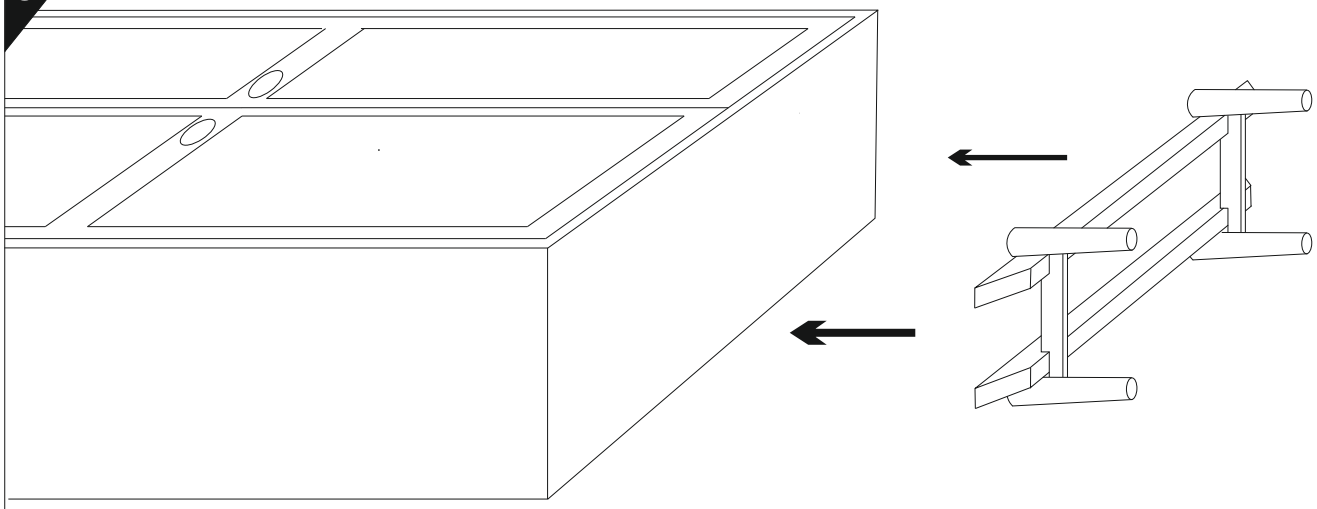

4

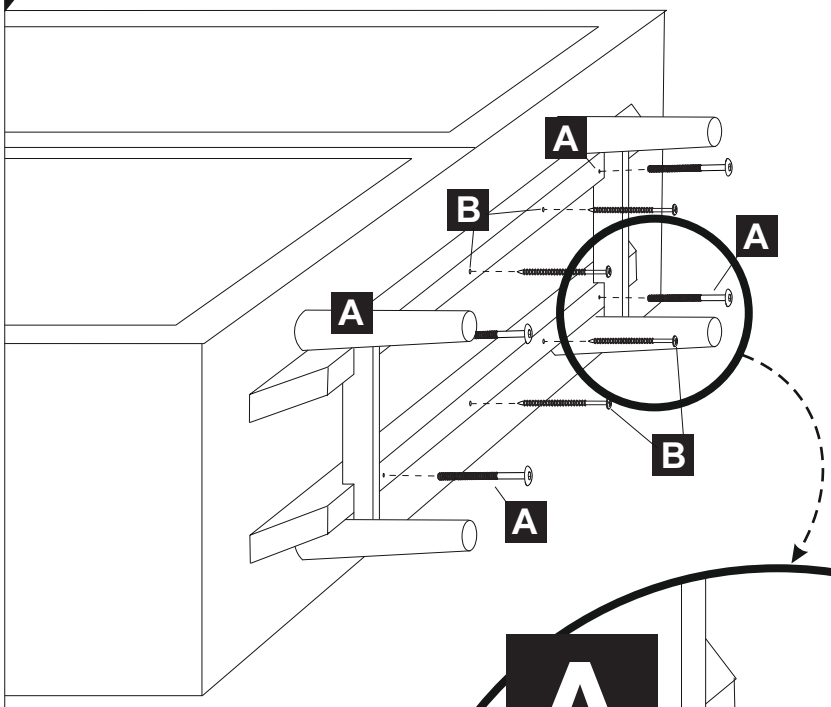

A	M6x60 mm	4
B	4x60mm	4
D	4 mm	1
241182		

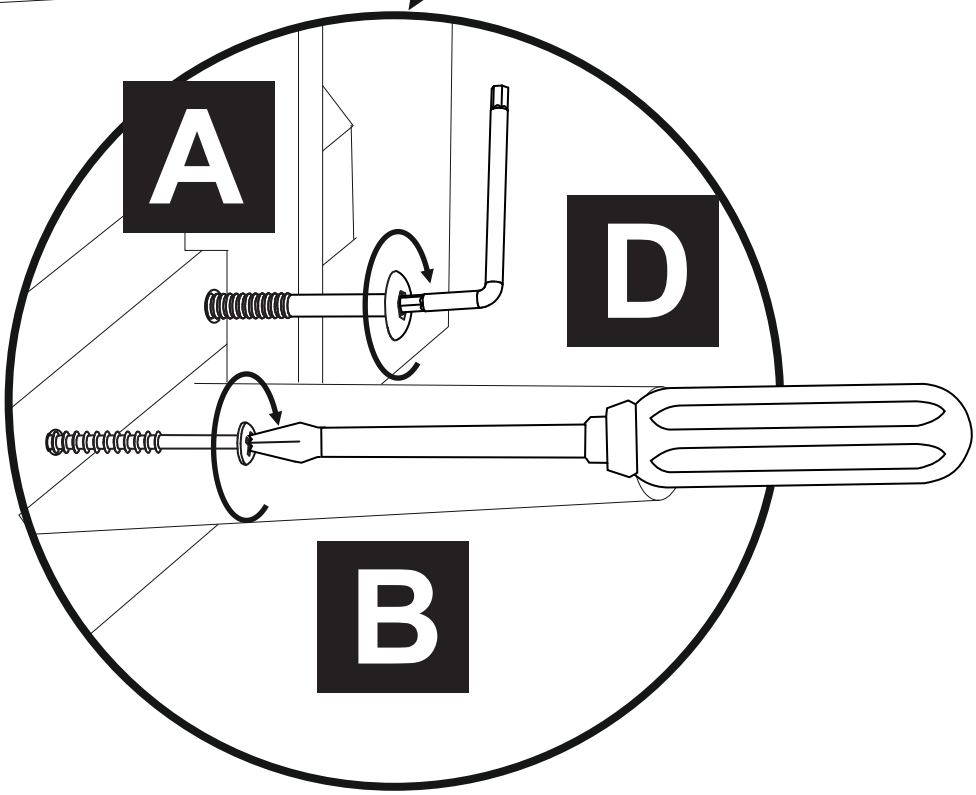

5

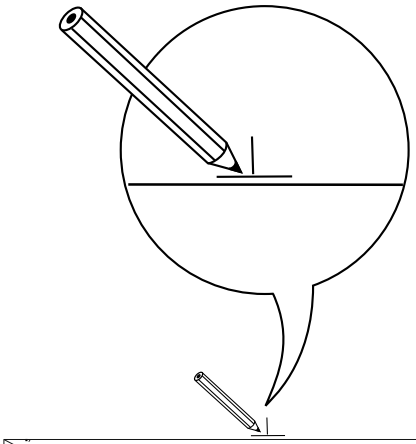

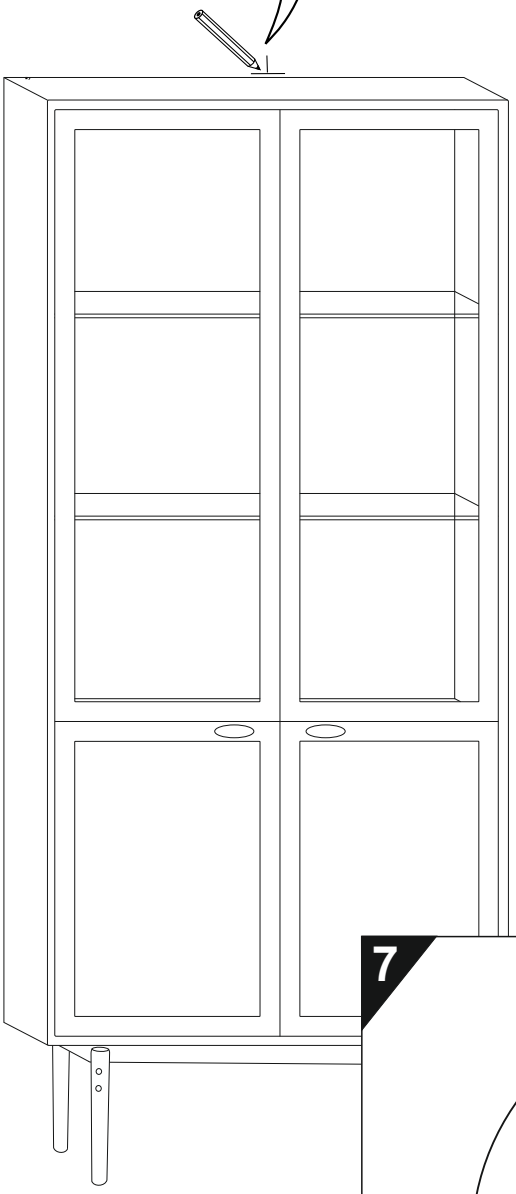

E

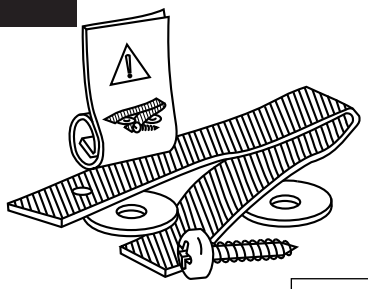

1

6

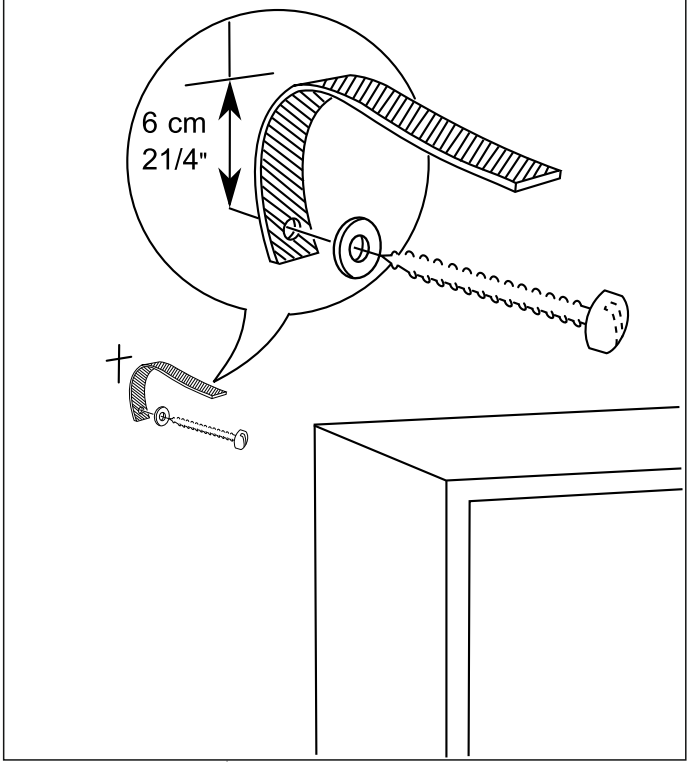

7

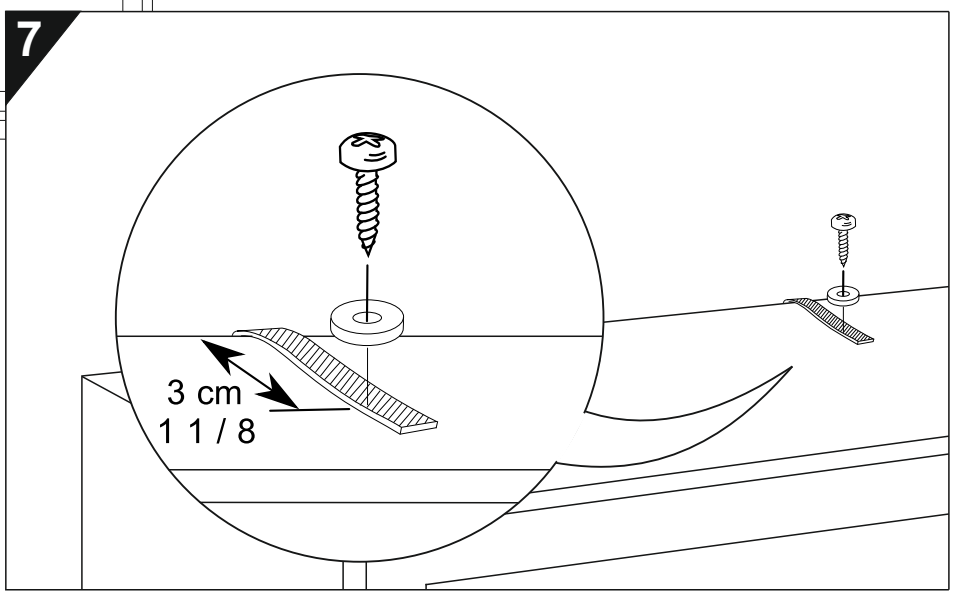

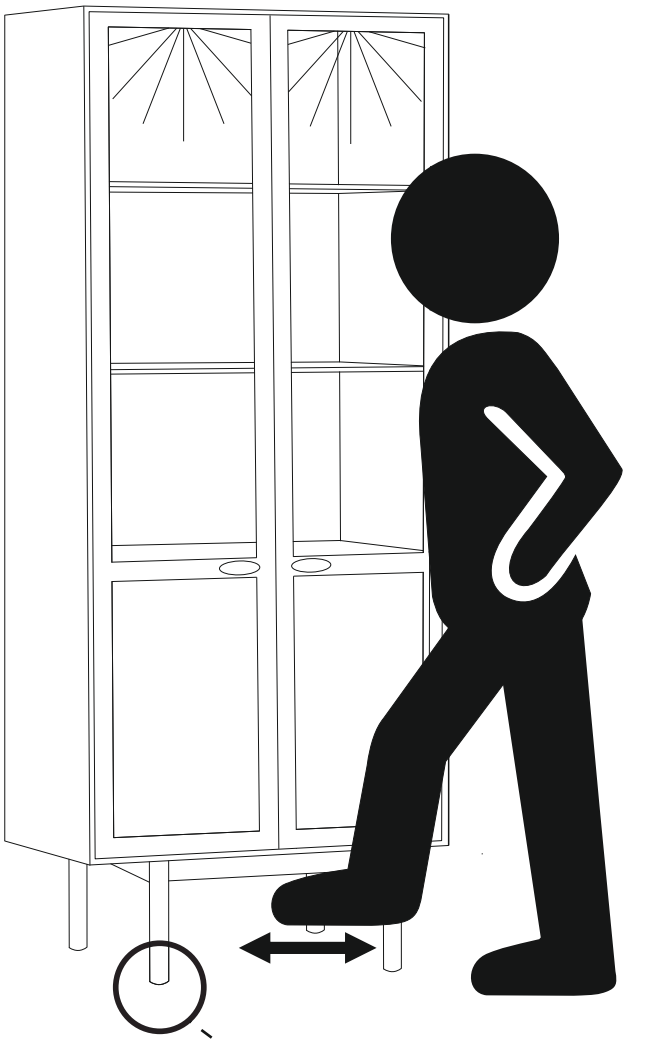

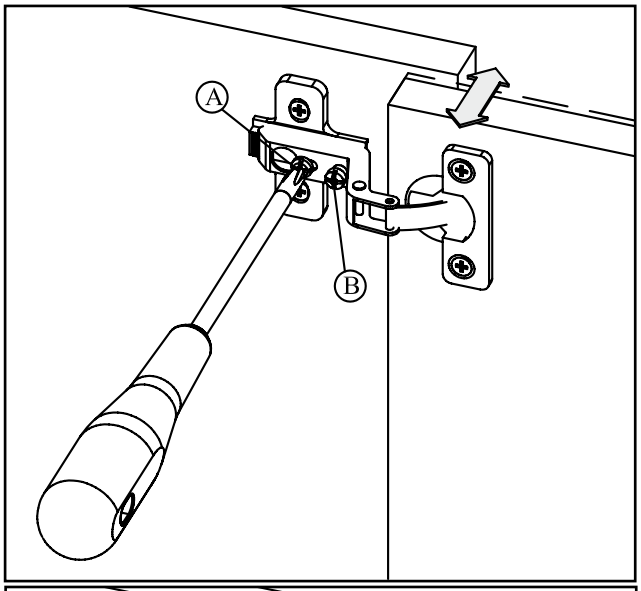
A
B

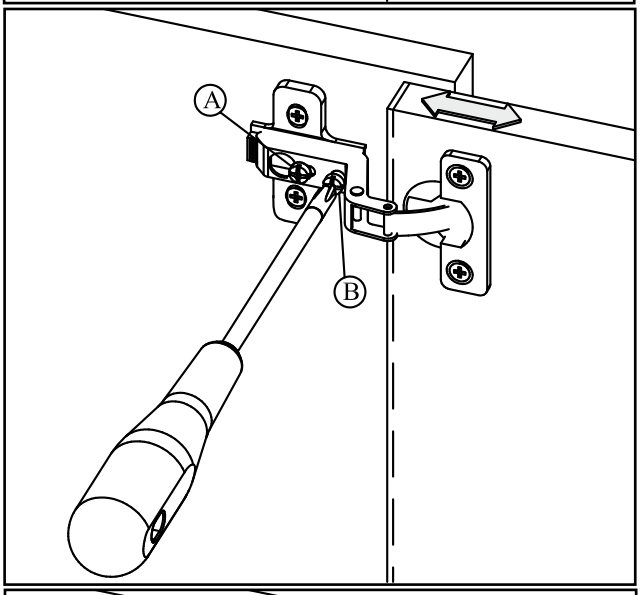
A
B

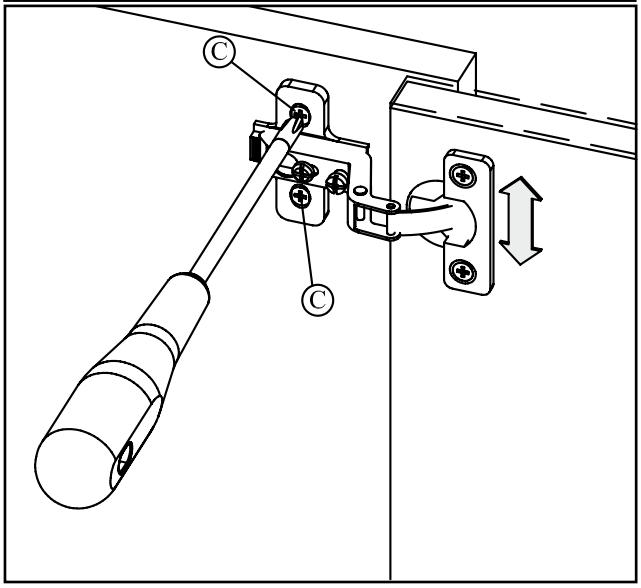
C
C

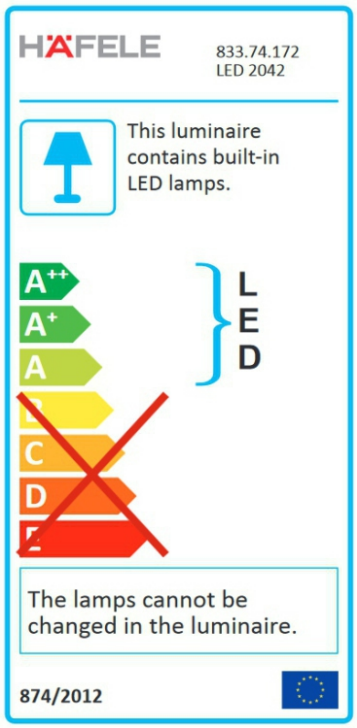
HÄFELE
833.74.172
LED 2042
This luminaire contains built-in LED lamps.
A++
A+
A
C
D
LED
The lamps cannot be changed in the luminaire.
874/2012

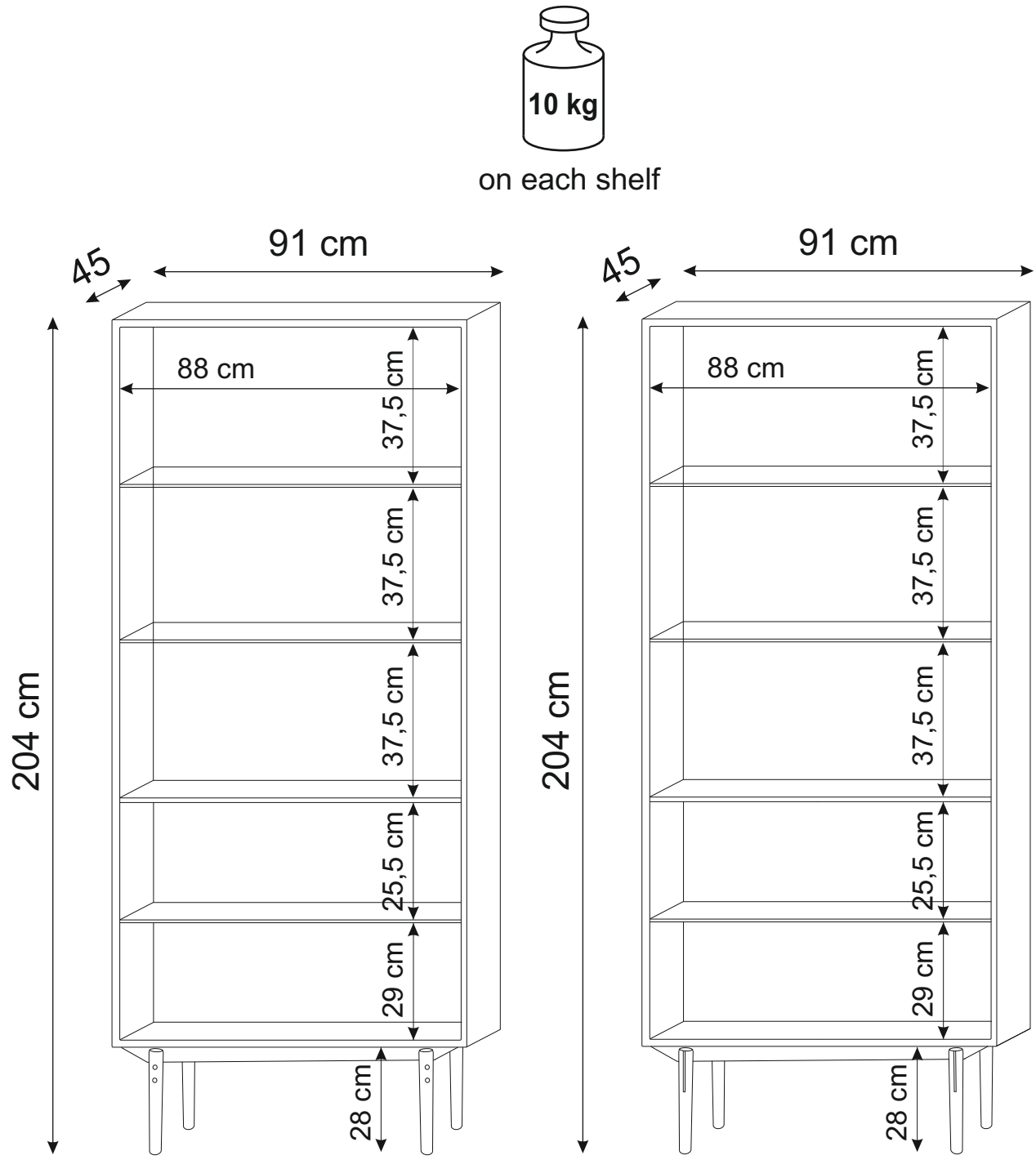
10 kg
on each shelf
91 cm
45
88 cm
204 cm
37,5 cm
37,5 cm
37,5 cm
25,5 cm
29 cm
28 cm
91 cm
45
88 cm
204 cm
37,5 cm
37,5 cm
37,5 cm
25,5 cm
29 cm
28 cm